IT1252 Electronics and Device Interfacing

Practical 1 - Introduction to Proteus

1. Analyze the following simple resistive voltage divider circuit using Proteus.

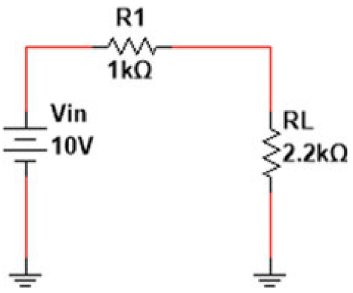

   (a) Start a new project and save it with your registration number. (E.g., 2022ICT123_P1Q1.pdsprj)

   (b) Create a schematic from the `DEFAULT` design template.

   (c) Select '`Do not create a PCB layout.`'

   (d) Select '`No Firmware Project.`'

   (e) Click the `P` icon to select the required components: `RES` and `BATTERY`.

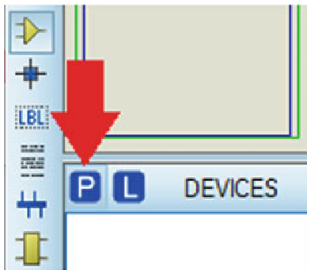

   (f) Add two resistors and a battery to the schematic.

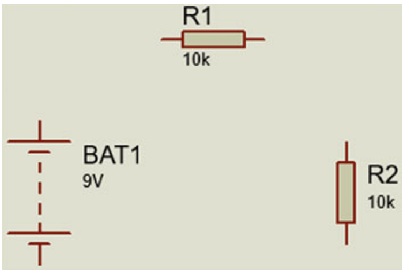

(g) Double click the components and change the voltage and resistance values.

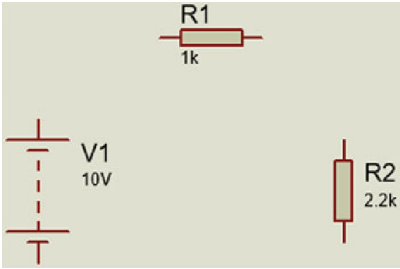

(h) Connect the components to each other.

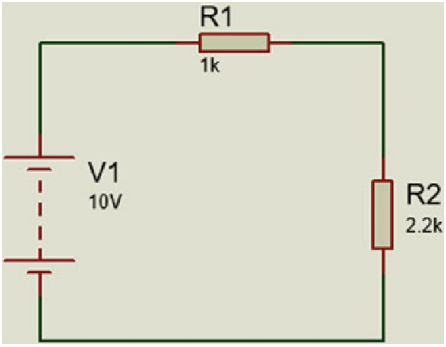

(i) **All the circuits must have a ground.**
Add a `GROUND` block to the schematic.

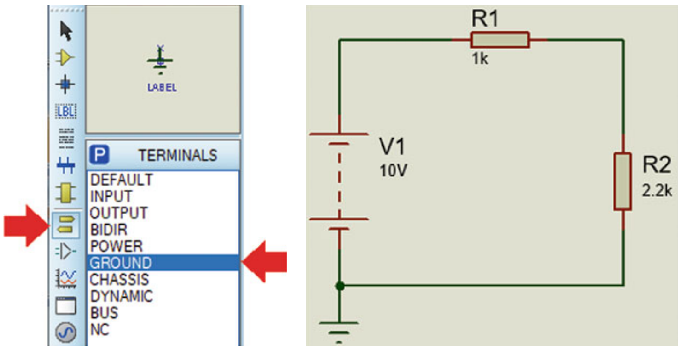

(j) Add a `DC VOLTMETER` and a DC AMMETER to the schematic.

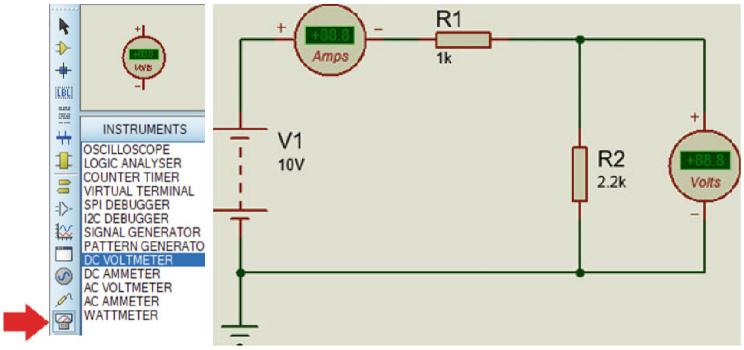

(k) Run the simulation.

(l) Calculate the circuit current and V_{R_L}. Compare them with the readings from the ammeter and the voltmeter.

$$I = \frac{V}{R} = \frac{V_{in}}{R_1 + R_L}$$

$$V_{R_L} = \frac{R_L}{R_1 + R_L} \times V_{in}$$
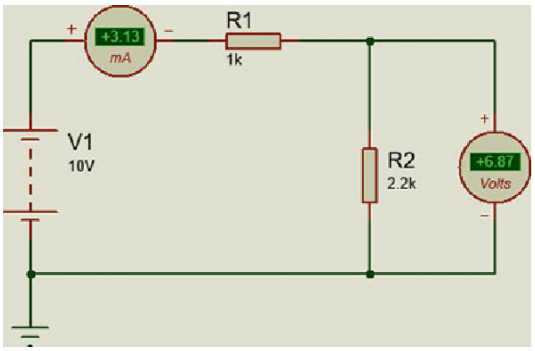
(m) Stop the simulation and increase the accuracy of the ammeter. Run the simulation again and verify the readings.